Queen Mary
University of London
Science and Engineering

EBU4202: Digital Circuit Design
Autonomous Sequential Circuit Design

Dr. Md Hasanuzzaman Sagor (Hasan)
Dr. Chao Shu (Chao)
Dr. Farha Lakhani (Farha)

School of Electronic Engineering and Computer Science,
Queen Mary University of London,
London, United Kingdom.

Overview: Autonomous Sequential Circuit Design

* Introduction
* Bistable Elements
* Latches & Flip-Flops
* Analysis Procedure
* Design Procedure

Chapter 7 – “Digital Design: Principles and Practices” book

Introduction

- Autonomous circuits do not have primary inputs, they have only secondaries (plus a clock signal).
- Secondaries, form input circuits, and consist of combinational logic that feeds back from flip-flop outputs to flip-flop inputs.
- There may also be output logic.

Introduction

Method

1. Draw-up a table of present and next states.**Need to take account of the characteristic equation of the flip-flop
2. Draw a Karnaugh map for each next state output in terms of the present state.
3. Minimise the logic using Karnaugh map simplification techniques.
4. Draw-up the corresponding circuit diagram for the FSM.

Example 1: D-type flip-flop

- Design an autonomous sequential circuit using D-type flip-flops to generate the following sequence of states: 001, 100, 010, 101, 110, 111, 011.

- Step 1 – Complete a table of present and next states.

- To complete this task we need to consider the functional operation (i.e. the characteristic equation) of the flip-flop used.

- D-type flip-flops have been used. So, input to A flip-flop, i.e. D_A, is equal to next state of A flip-flop Q_A* i.e.: $D_A = Q_A$*

Example 1: D-type flip-flop

- The table of present and next states is given below.

Present State			Next State			D inputs		
Q_A	Q_B	Q_C	Q_A^*	Q_B^*	Q_C^*	D_A	D_B	D_C
0	0	1	1	0	0	1	0	0
1	0	0	0	1	0	0	1	0
0	1	0	1	0	1	1	0	1
1	0	1	1	1	0	1	1	0
1	1	0	1	1	1	1	1	1
1	1	1	0	1	1	0	1	1
0	1	1	0	0	1	0	0	1

有3輸入輸出 → 画 K map

- Step 2 – Draw a Karnaugh map for each next output state in terms of the present state.

0少

∴描0方便

Example 1: D-type flip-flop

don't care case

Input Logic K-Map		Q_AQ_B			
		00	01	11	10
Q_C	0	-	1	1	0
	1	1	0	0	1

Q_A^*

- $Q_A^* = D_A = Q_BQ_C' + Q_B'Q_C = Q_B \oplus Q_C$

Characteristic equation

Input Logic K-Map		Q_AQ_B			
		00	01	11	10
Q_C	0	-	0	1	1
	1	0	0	1	1

Q_B^*

- $Q_B^* = D_B = Q_A$

Example 1: D-type flip-flop

Input Logic K-Map		Q_AQ_B			
		00	01	11	10
Q_C	0	-	1	1	0
	1	0	1	1	0

Q_C^*

- $Q_C^* = D_C = Q_B$

开始connect

Example 1: D-type flip-flop

- Step 4 – We can now draw the circuit diagram for the FSM.

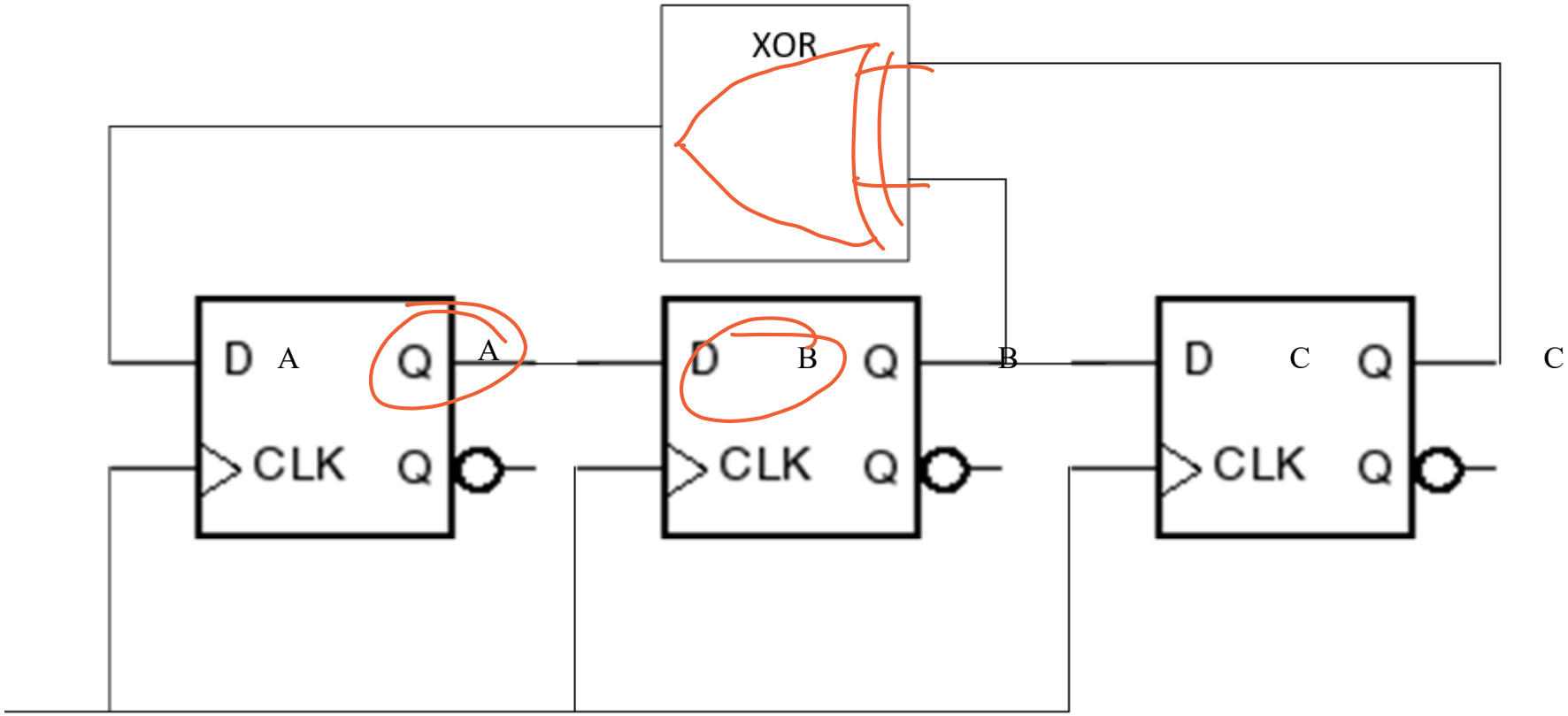

Example 2: JK flip-flop

- Design a 3 bit binary counter using JK flip-flops.
- We need 3 flip-flops, one for each bit.
- Let's recap. the steps in the method

Example 2: JK flip-flop

Method

1. Draw-up a table of present and next states. Need to take account of the characteristic equation of the flip-flop

2. Draw a Karnaugh map for each next state output in terms of the present state.

3. Minimise the logic using Karnaugh map simplification techniques.

4. Draw-up the corresponding circuit diagram for the FSM.

Example 2: JK flip-flop

- Step 1 – Complete the table of present and next states.

- Use the JK transition table to complete entries in the table corresponding to the inputs to J and K.

J	K	CLK	Q	QN
x	x	0	last Q	last QN
x	x	1	last Q	last QN
0	0	↑	last Q	last QN
0	1	↑	0	1
1	0	↑	1	0
1	1	↑	last QN	last Q

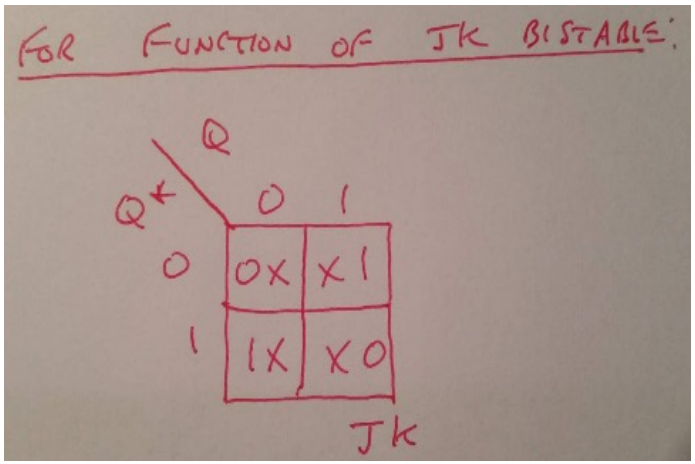

Prev → Next	J	K
0 → 0	0	X
0 → 1	1	X
1 → 0	X	1
1 → 1	X	0

Example 2: JK flip-flop

用 current state作为 input TB

JK 作为 TB的output.

- The table of present and next states is given below.

Present State			Next State			JK inputs		
Q_A	Q_B	Q_C	Q_A^*	Q_B^*	Q_C^*	J_AK_A	J_BK_B	J_CK_C
0	0	0	0	0	1	0x	0x	1x
0	0	1	0	1	0	0x	1x	x1
0	1	0	0	1	1	0x	x0	1x
0	1	1	1	0	0	1x	x1	x1
1	0	0	1	0	1	x0	0x	1x
1	0	1	1	1	0	x0	1x	x1
1	1	0	1	1	1	x0	x0	1x
1	1	1	0	0	0	x1	x1	x1

- Steps 2 & 3 – Now draw 6 Karnaugh maps, one for each of the J and K inputs, in terms of the present states

Prev → Next	J	K
0 → 0	0	X
0 → 1	1	X
1 → 0	X	1
1 → 1	X	0

Example 2: JK flip-flop

Input Logic K-Map		Q_AQ_B			
		00	01	11	10
Q_C	0	0	0	x	x
	1	0	1	x	x

J_A

- $J_A = Q_B.Q_C$

Input Logic K-Map		Q_AQ_B			
		00	01	11	10
Q_C	0	x	x	0	0
	1	x	x	1	0

K_A

- $K_A = Q_B.Q_C$

Example 2: JK flip-flop

Input Logic K-Map		Q_AQ_B			
		00	01	11	10
Q_C	0	0	x	x	0
	1	1	x	x	1

J_B

- $J_B=Q_C$

Input Logic K-Map		Q_AQ_B			
		00	01	11	10
Q_C	0	x	0	0	x
	1	x	1	1	x

K_B

- $K_B=Q_C$

Example 2: JK flip-flop

Input Logic K-Map		Q_AQ_B			
		00	01	11	10
Q_C	0	1	1	1	1
	1	x	x	x	x

J_C

- $J_C=1$

Input Logic K-Map		Q_AQ_B			
		00	01	11	10
Q_C	0	x	x	x	x
	1	1	1	1	1

K_C

- $K_C=1$

Example 2: JK flip-flop

- Step 4 – We can now draw the circuit diagram for the FSM.

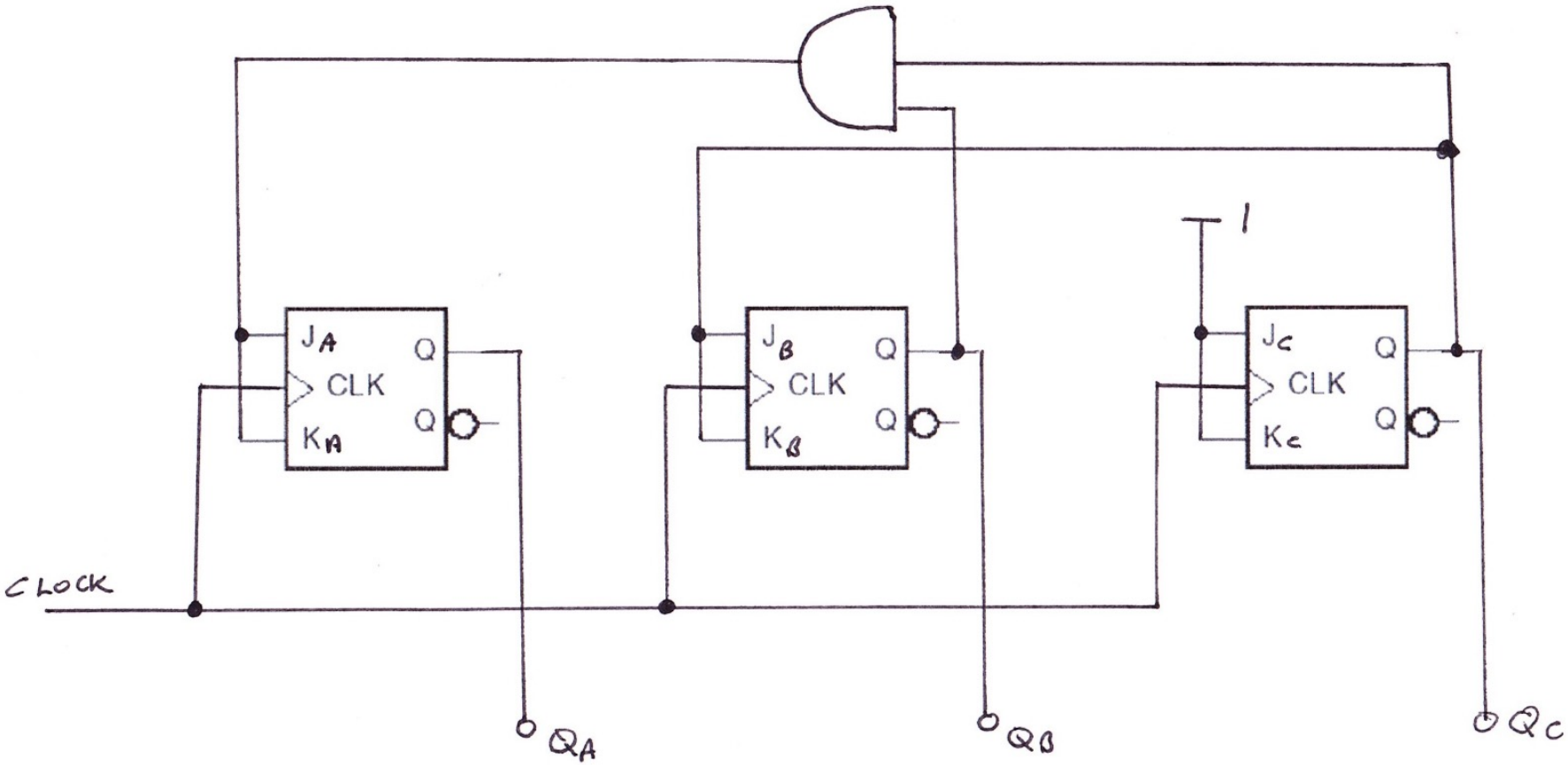

Example 3: JK flip-flop

- Design a 6-state counter using the first six binary numbers. Use JK flip-flops.
- What is the result if either of the cannot happen input states (marked – in the maps) does happen?
- Step 1 – Complete the table of present and next states.
- Use the JK transition table to complete the table for the inputs to J and K.

Example 3: JK flip-flop

- The table of present and next states is given below

Present State			Next State			JK inputs		
Q_A	Q_B	Q_C	Q_A^*	Q_B^*	Q_C^*	J_AK_A	J_BK_B	J_CK_C
0	0	0	0	0	1	0x	0x	1x
0	0	1	0	1	0	0x	1x	x1
0	1	0	0	1	1	0x	x0	1x
0	1	1	1	0	0	1x	x1	x1
1	0	0	1	0	1	x0	0x	1x
1	0	1	0	0	0	x1	0x	x1
-	-	-	-	-	-	-	-	-
-	-	-	-	-	-	-	-	-

- Steps 2 & 3 – Now draw the 6 K-maps for the J and K inputs.

Prev → Next	J	K
0 → 0	0	X
0 → 1	1	X
1 → 0	X	1
1 → 1	X	0

Queen Mary University of London

Example 3: JK flip-flop

Input Logic K-Map		Q_AQ_B			
		00	01	11	10
Q_C	0	0	0	-	x
	1	0	1	-	x

J_A

- $J_A=Q_B.Q_C$

Input Logic K-Map		Q_AQ_B			
		00	01	11	10
Q_C	0	x	x	-	0
	1	x	x	-	1

K_A

- $K_A=Q_C$

Example 3: JK flip-flop

Input Logic K-Map		Q_AQ_B			
		00	01	11	10
Q_C	0	0	x	-	0
	1	1	x	-	0

J_B

- $J_B=Q_A'.Q_C$

Input Logic K-Map		Q_AQ_B			
		00	01	11	10
Q_C	0	x	0	-	x
	1	x	1	-	x

K_B

- $K_B=Q_C$

Example 3: JK flip-flop

Input Logic K-Map		Q_AQ_B			
		00	01	11	10
Q_C	0	1	1	-	1
	1	x	x	-	x

J_C

- $J_C=1$

Input Logic K-Map		Q_AQ_B			
		00	01	11	10
Q_C	0	x	x	-	x
	1	1	1	-	1

K_C

- $K_C=1$

Example 3: JK flip-flop

- Step 4 – Then we can draw the circuit diagram……

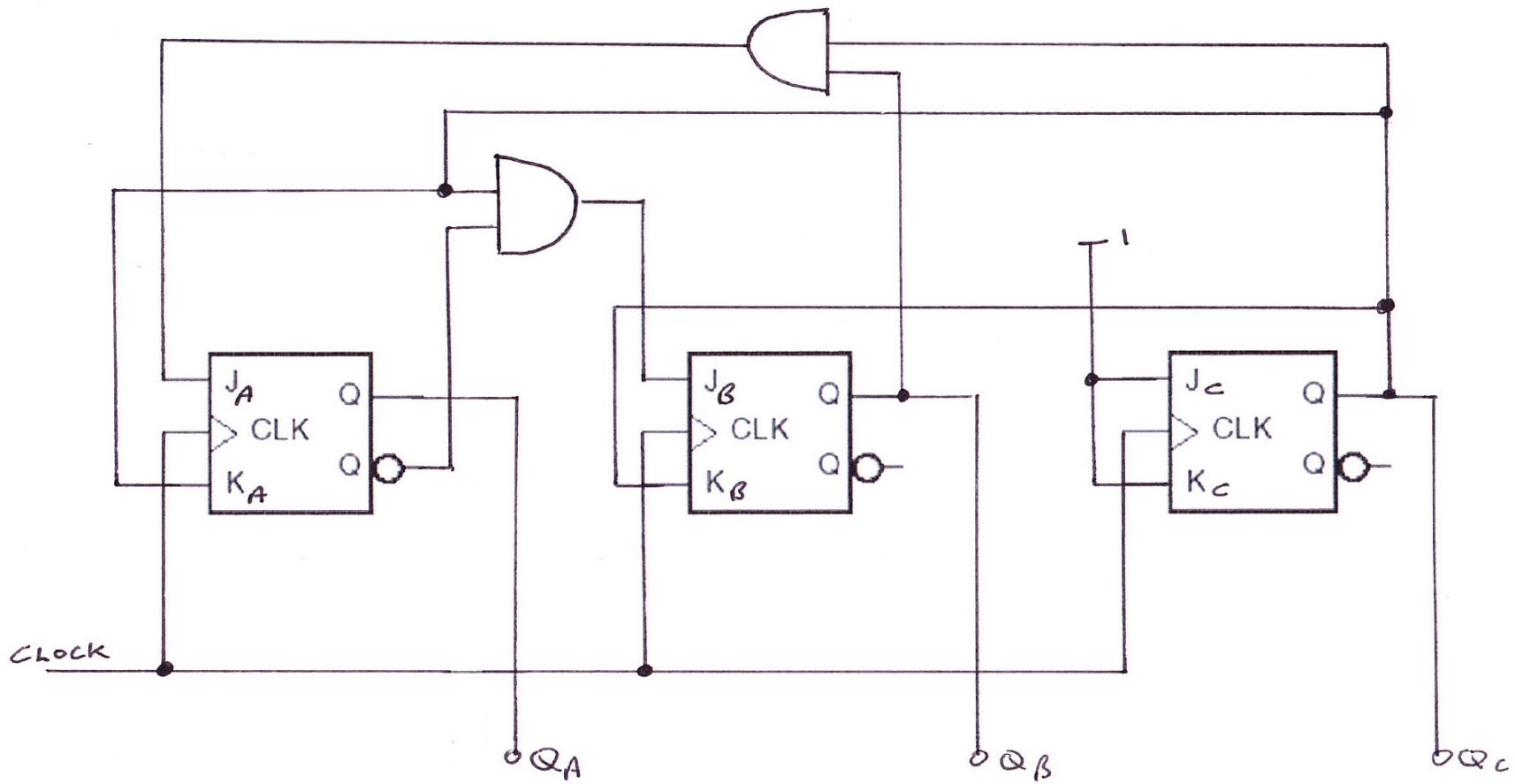

Example 3: JK flip-flop

- To think about the “cannot happen” input states…… Because we have minimised the logic circuits by grouping “1s” with “cannot happens” and “don’t cares”, we are forcing the next states of a cannot happen.

- We can look at our K-maps and make the following table:

Present State			JK inputs			Next State		
Q_A	Q_B	Q_C	J_AK_A	J_BK_B	J_CK_C	Q_A^*	Q_B^*	Q_C^*
1	1	0	00	00	11	1	1	1
1	1	1	11	01	11	0	0	0

Example 3: JK flip-flop

- So, if state 6 is entered the next state is state 7, and if state 7 is entered the next state is state 0.

- So the state diagram is:

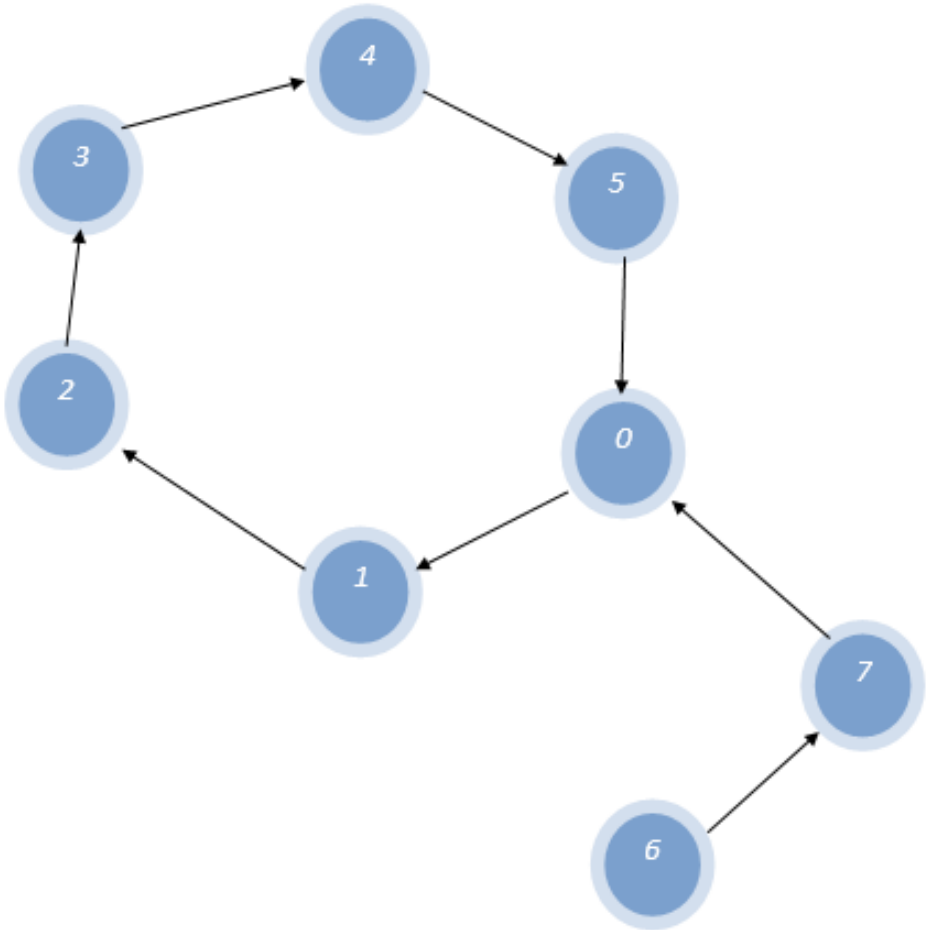

Example 4: T flip-flop

- Repeat example 3 this time using T-flip-flops (i.e. 6 state counter using the first 6 binary numbers).

- Step 1 – Complete the present state and next state table, adding the toggle input (T) of each flip-flop. Put a 1 for the T input if the bit needs to change state.

Example 4: T flip-flop

- The table of present and next states is given below

Present State			Next State			T input		
Q_A	Q_B	Q_C	Q_A^*	Q_B^*	Q_C^*	T_A	T_B	T_C
0	0	0	0	0	1	0	0	1
0	0	1	0	1	0	0	1	1
0	1	0	0	1	1	0	0	1
0	1	1	1	0	0	1	1	1
1	0	0	1	0	1	0	0	1
1	0	1	0	0	0	1	0	1
-	-	-	-	-	-	-	-	-
-	-	-	-	-	-	-	-	-

- Steps 2 & 3 – Now draw the 3 K-maps, one for each flip-flop input.

Example 4: T flip-flop

Input Logic K-Map		Q_AQ_B			
		00	01	11	10
Q_C	0	0	0	-	0
	1	0	1	-	1

T_A

- $T_A = Q_A.Q_C + Q_B.Q_C$

Input Logic K-Map		Q_AQ_B			
		00	01	11	10
Q_C	0	0	0	-	0
	1	1	1	-	0

T_B

- $T_B = Q_A'.Q_C$

Queen Mary University of London

Example 4: T flip-flop

Input Logic K-Map		Q_AQ_B			
		00	01	11	10
Q_C	0	1	1	-	1
	1	1	1	-	1

T_C

- T_C=1

- Step 4 – Now we can draw the circuit diagram…….

Example 4: T flip-flop

Circuit Diagram:

$T_A = Q_A.Q_C + Q_B.Q_C = Q_C.(Q_A + Q_B)$

$T_B = Q_A'.Q_C$, $T_C = 1$

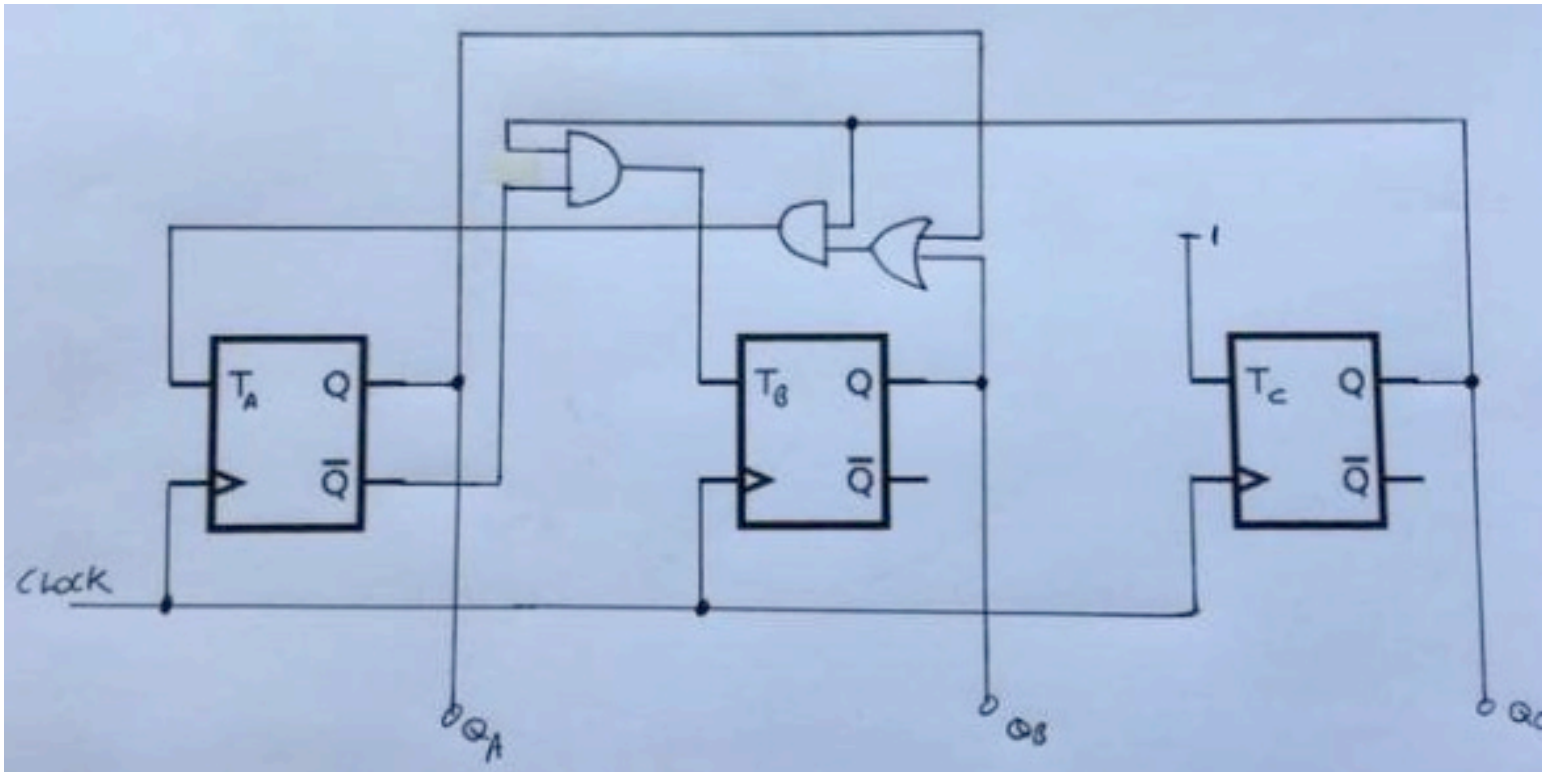

Example 4: T flip-flop

- For the two cannot happen states based on our groupings for the T inputs a “1” in the T input means “change state”

Present State			T Input			Next State		
Q_A	Q_B	Q_C	T_A	T_B	T_C	Q_A^*	Q_B^*	Q_C^*
1	1	0	0	0	1	1	1	1
1	1	1	1	0	1	0	1	0
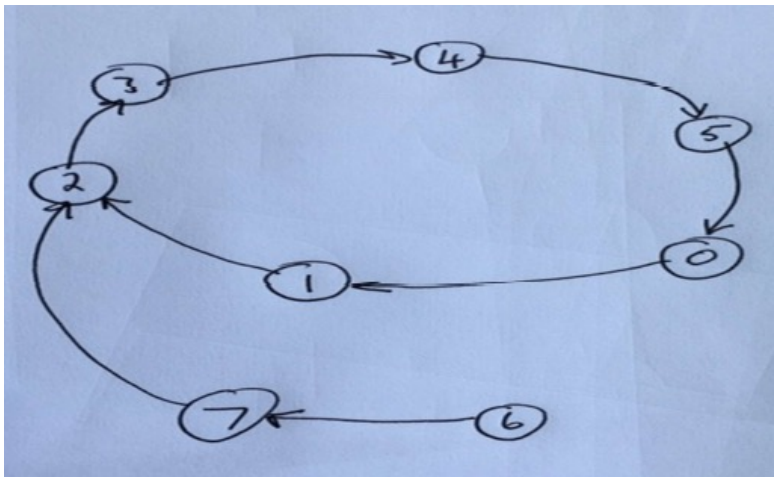
- So, if state 6 is entered the next state is state7. If state 7 is entered the next state is state 2.